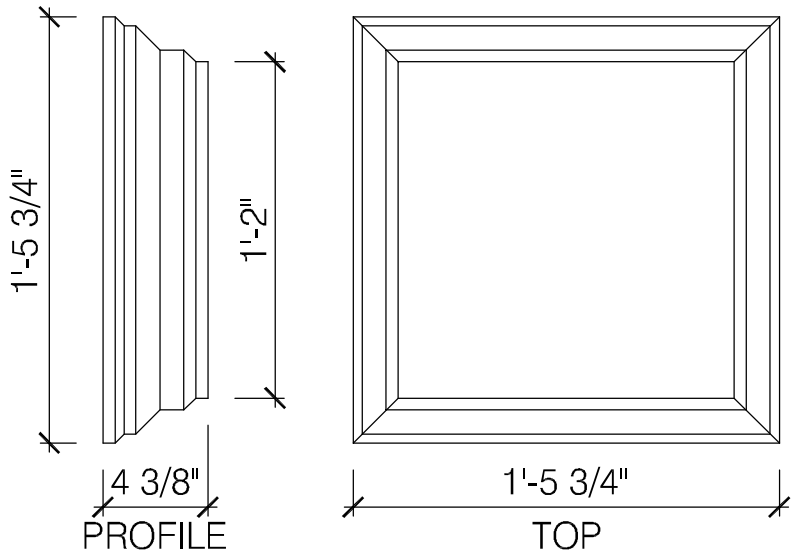

PIECE ID	QUANTITY
COL1416C	

COLOR: _____

CCS TOLERANCE: ±.125

SHOP DRAWING(S) STATUS (CHECK ONE)

RESUBMIT FOR APPROVAL: ☐

APPROVED W/ MODIFICATIONS: ☐

APPROVED ☐

SIGNATURE _____ DATE _____

PRINTED NAME _____

DATE:

PROJECT:

CONTRACTOR:

CUSTOM CAST STONE
ARCHITECTURAL COMMERCIAL RESIDENTIAL
734 East 169th Street, Westfield, IN 46074
Business: (317)896-1700 Fax: (317)896-1701 Toll Free: (888) 776-9960
Web: www.customcaststone.com Email: customcaststone@yahoo.com

DRAWN BY:

CHECKED BY:

SHEET NO.
CS1
1 OF 1

Document Produced by deskPDF Unregistered - http://www.docudesk.com